FRIENDSHIP THROUGH RADIO
AMICIZIA ATTRAVERSO LA RADIO

ELECRAFT

K3

Suggested Modification
Modifiche Suggerite

Gian Moda, I7SWX
Sergio Valentino, IK8TNG

May 2011 / Rev May 2012

ELECRAFT K3 * I7SWX PROPOSED MODIFICATIONS

Copyright Giancarlo Moda – I7SWX * Sergio Valentino - IK8TNG

The Elecraft K3 transceiver is one of the most performing HF amateur radio equipment. This does not mean that there are no possibilities for improvements. It is possible that improvements are not as much impressive as for other equipment but there are.

Having experimented with mods on several commercial amateur radio equipment (Icom, Kenwood, Yaesu and others) with very interesting performance improvements, a decision was taken to experiment with a mod on the Elecraft K3 transceiver.
The key to the trial was the fact that the 1st mixer is assembled on a specific PCB that is a plug-in option on the main board and also on the sub receiver. To replace such a mixer no soldering work has to be performed, a real option "swap". This aspect is important as it permits all K3 users to experiment improvements, without rendering unsellable the transceiver, as the original mixer can be reinserted.

The designed mixer is the I7SWX 2T H-Mode Mixer with FSA3157 analog switches and LVDS squarer. See circuit diagram. Two 2T H-Mode Mixer configurations have been designed, one for the 1st mixer in the main receiver and one for the 1st mixer in the sub receiver. Really the mixers are the same, the only difference is that the one for the main receiver, being used bi-directionally as RX and TX mixer, does not have the diplexer in the RX IF output (8.215MHz) that becomes RF output (1.6-52MHz) in TX. The mixer for the sub-receiver has the terminating diplexer in the IF output, see circuit diagram.

Mods pictures and measurements on the K3 and Mixers have been provided by Nicola Milillo, IZ7ANL, Sergio Valentino, IK8TNG and Gian Moda, I7SWX. The hardware assembly and trials have been performed by IK8TNG.

The Elecraft K3 s/n 01757 transceiver was made available by Mario Pesce, IZ8DBJ. Our sincere thanks go to IZ8DBJ for supporting the idea, permitting this trial, and for his staying without his radio for some time.

Following interaction with some K3 owners additional modifications have been studied like xtal filters bank termination and VCO PSU Filter.

Sub RX H-Mode Mixer Pictures have been taken by Tuomo Asikainen, OH1LEU.

Assembled PCB units are made available for interested users, please contact i7swx@yahoo.com

These modifications are intellectual property of Giancarlo Moda, I7SWX, and Sergio Valentino, IK8TNG, and are authorized for amateur radio personal use only.

Giancarlo Moda, I7SWX
Via Azzone Mariano 24
70010 CASAMASSIMA BA
Italy

K3 1st MIXER KR OPTION MAIN RX

The first mixer stage used in the K3 transceiver is a passive switched DBM, using Fast Bus Switches, and being originated from the Ed Oxner design (80s). This mixer is replaced with the I7SWX 2T FSA3157 H-Mode Mixer, originated from the I7SWX 2T FST3125 H-Mode Mixer. The H-Mode Mixer has been invented by Colin Horrabin, G3SBI, and has removed the mixer from being the critical stage of a receiver.

For more information on the H-Mode Mixer please visit:
www.xs4all.nl/~martein/pa3ake/hmode/

PANORAMIC VIEW COMPARISON BETWEEN K3 ORIGINAL AND 2T H-MODE MIXERS

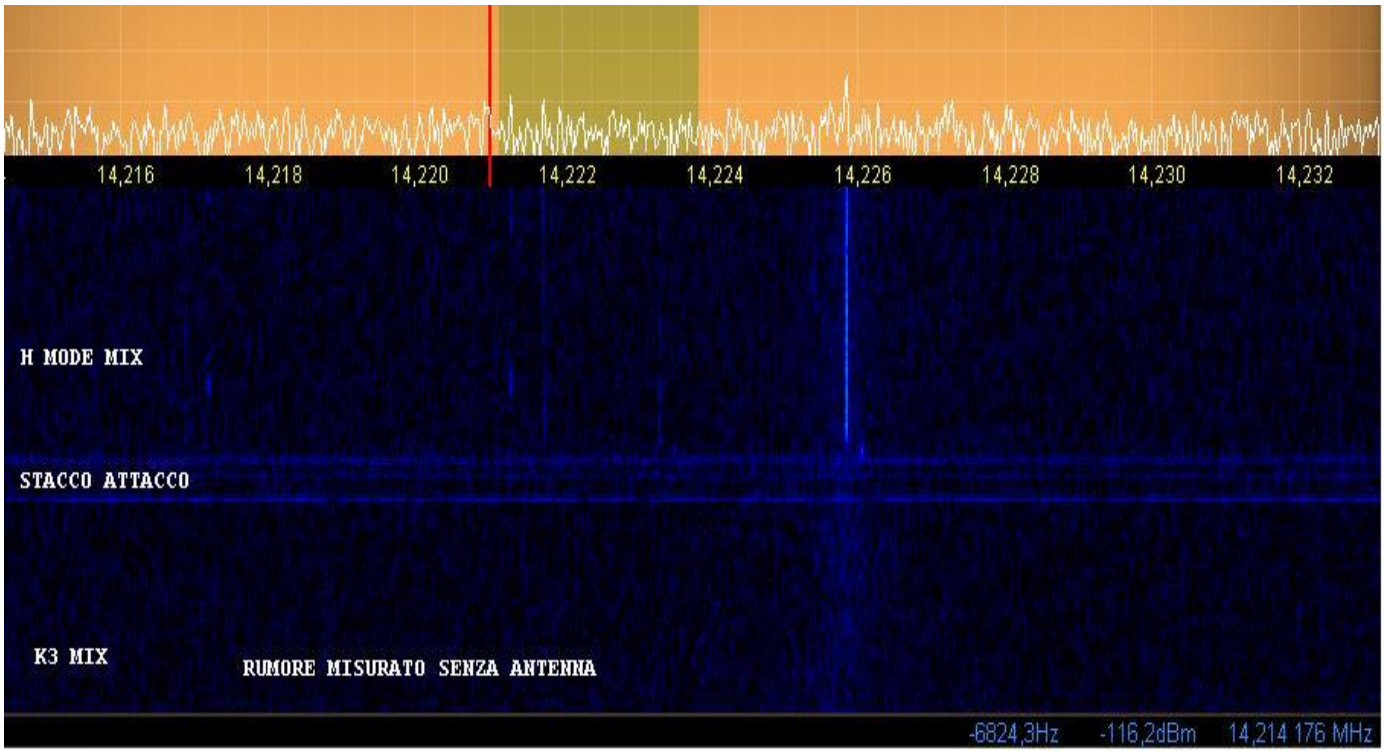

K3 Panoramic View. Top is with 2T H-Mode Mixer. Bottom is with original mixer. Antenna connected to input 1 and antenna switch selection on Ant 2. There is a lower noise with the H-MM and also higher sensitivity seeing signals through the antennas relay switch capacitance.
The improvement in noise and sensitivity can be seen through the Panoramic Display connected to K3 IF. See picture.

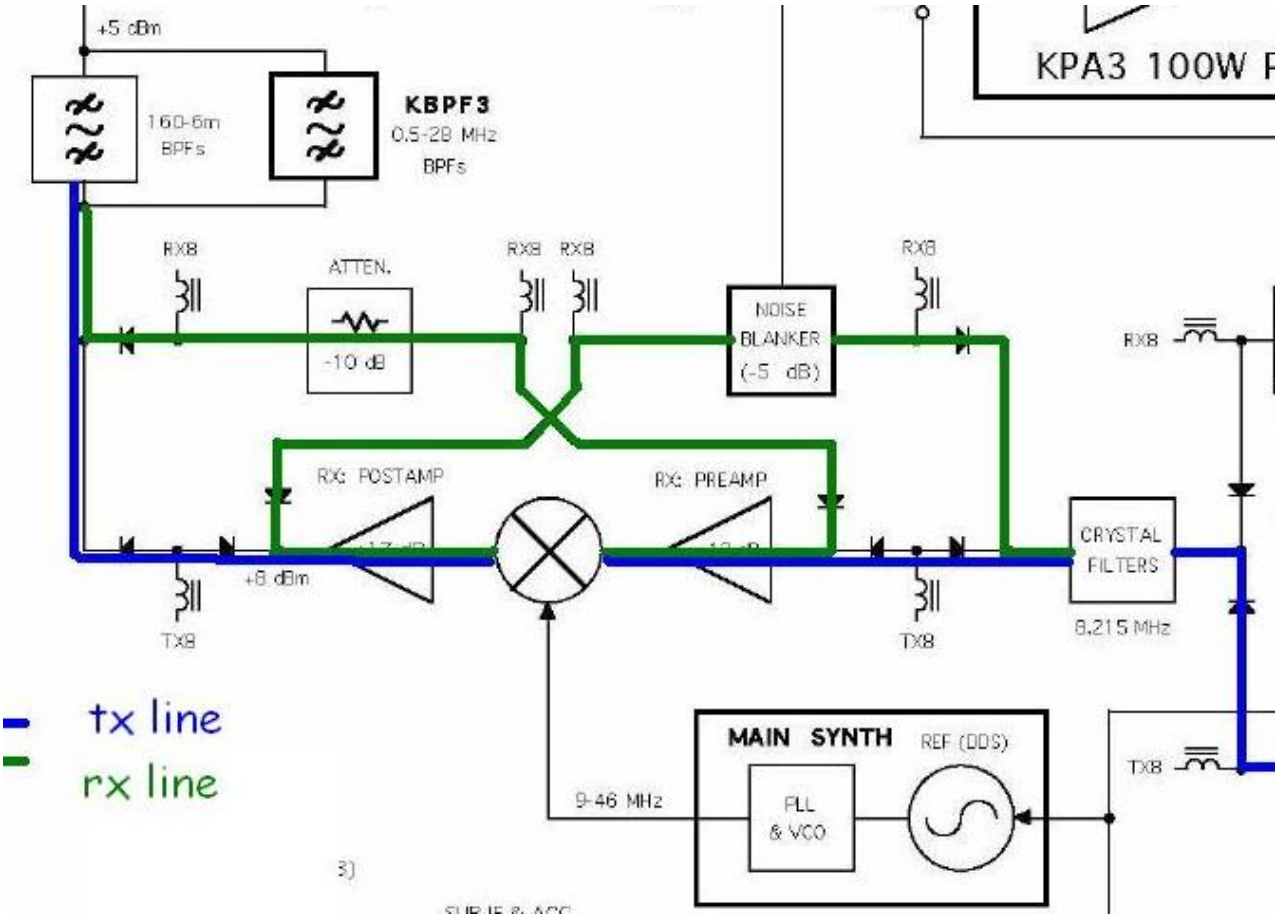

K3 BLOCK DIAGRAM RELATIVE TO 1ST MIXER STAGES ON MAIN RX/TX

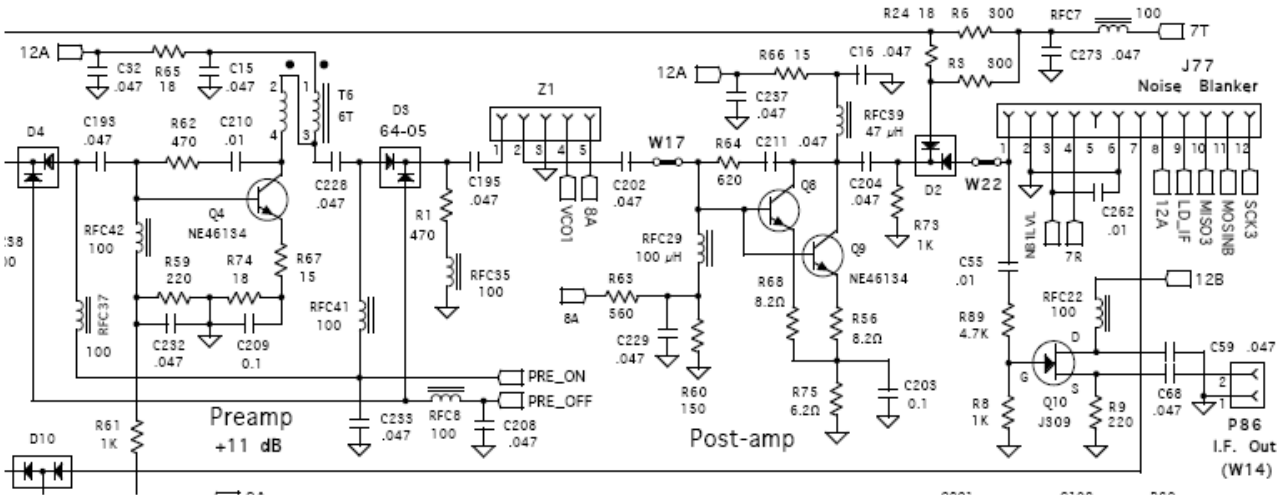

K3 MAIN RX CIRCUIT DIAGRAM - STAGES AROUND 1ST MIXER

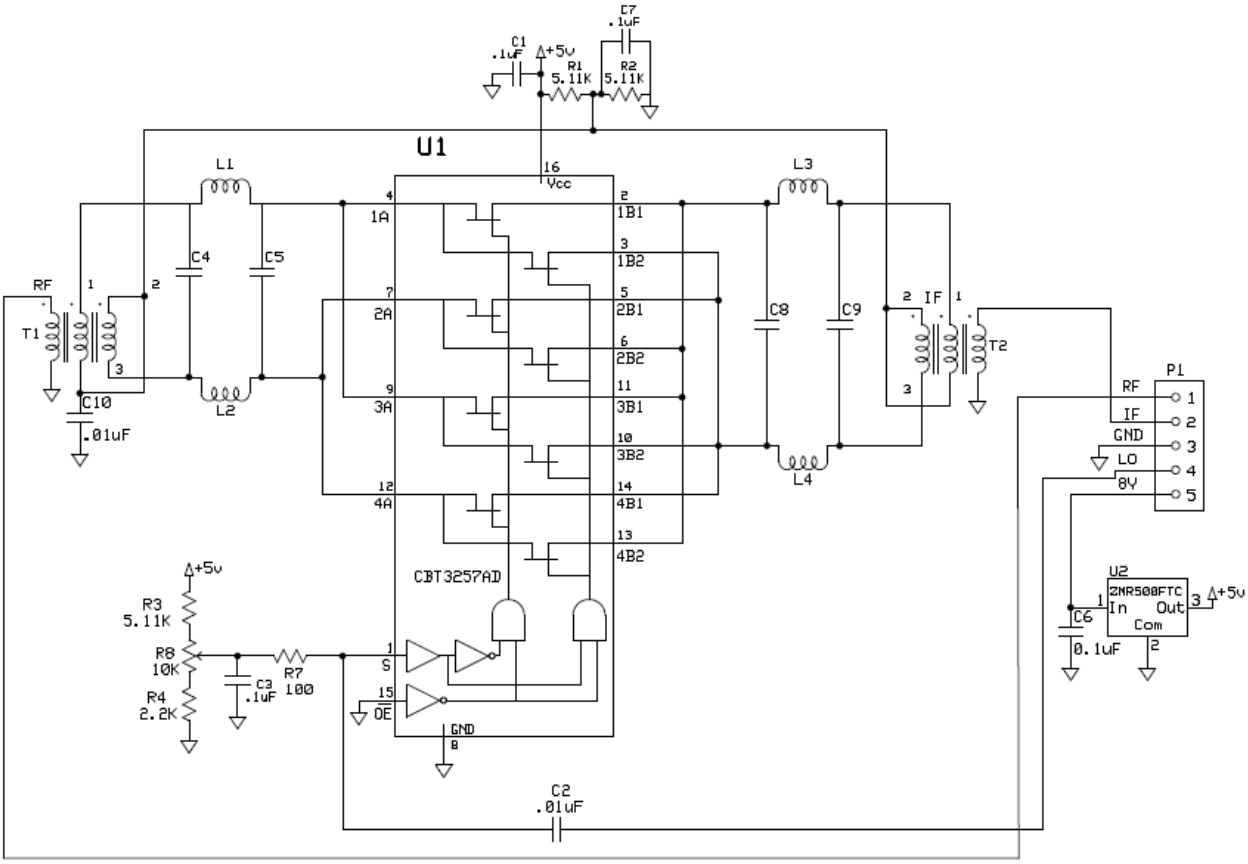

K3 – CIRCUIT DIAGRAM OF ORIGINAL 1ST MIXER

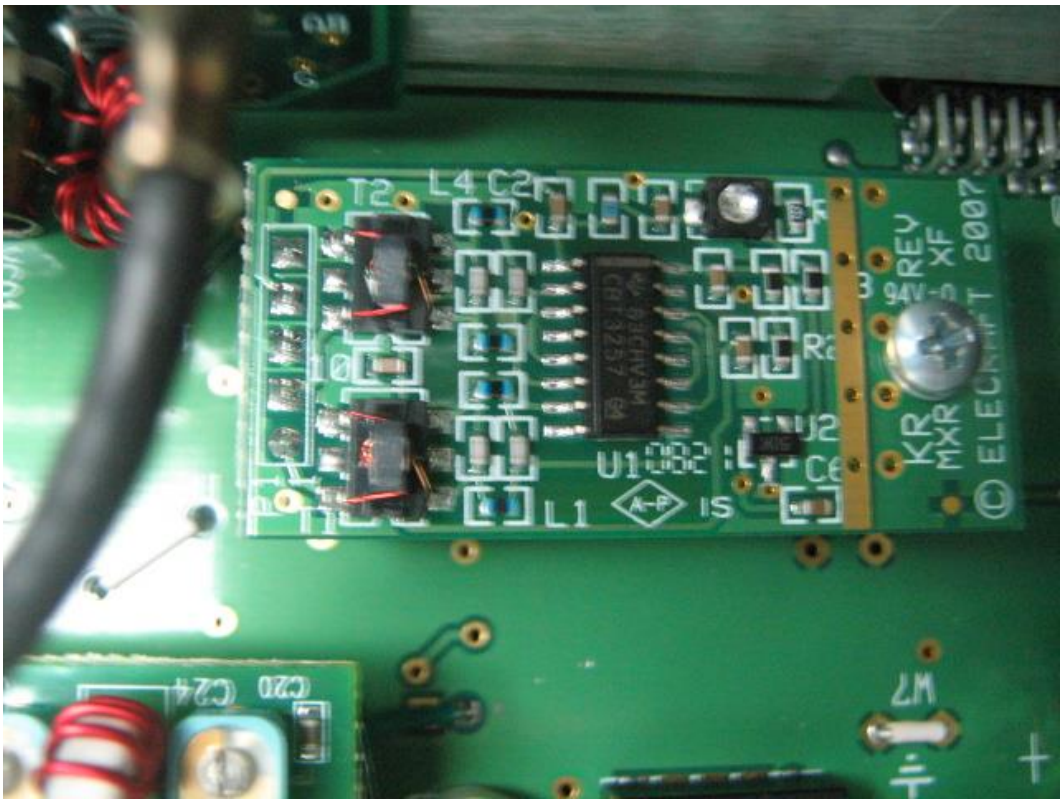

This is the K3 original mixer PCB assy

I7SWX - IK8TNG K3 Main RX 1st MIXER MOD 2T H-MODE MIXER

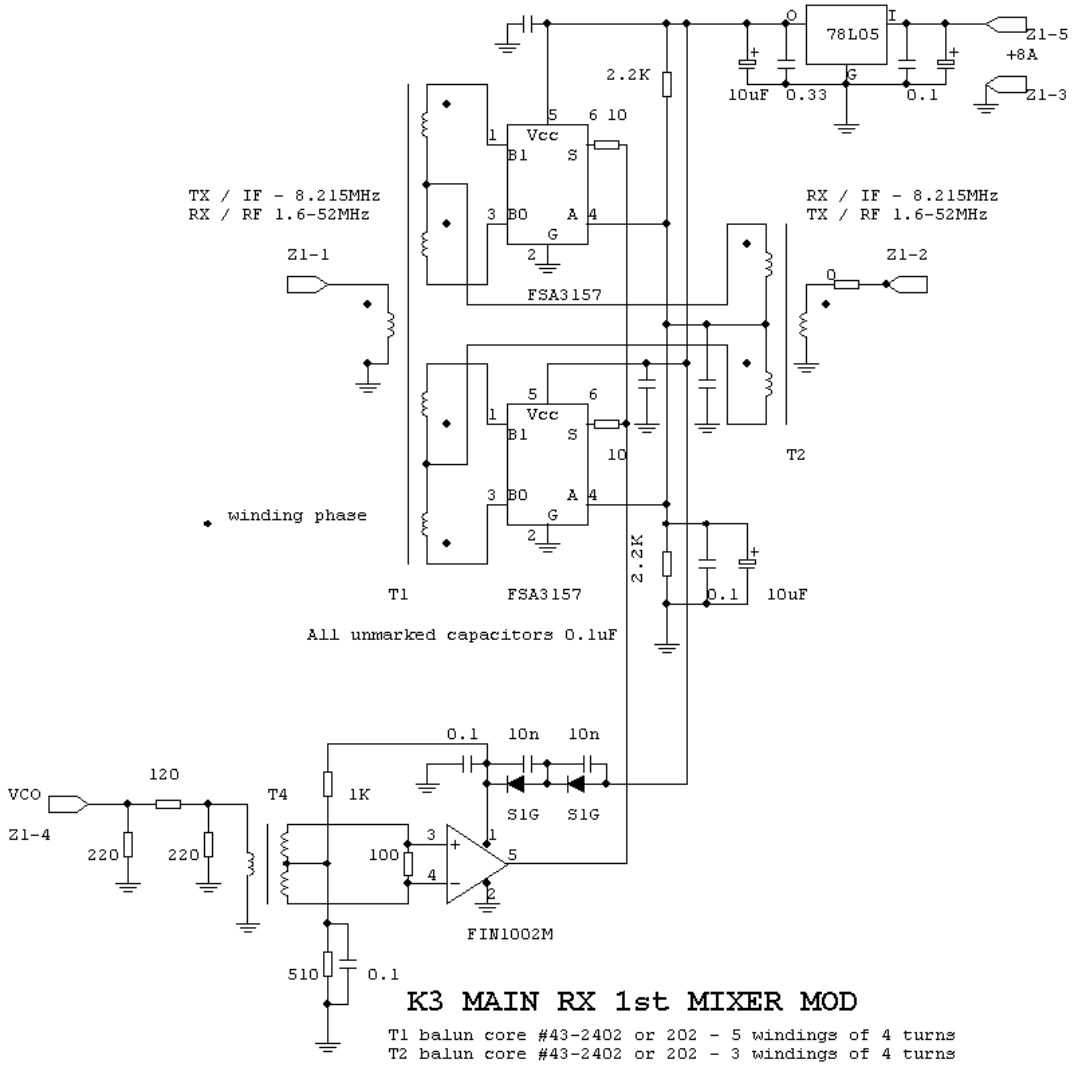

K3 MAIN RX 1st MIXER MOD

T1 balun core #43-2402 or 202 - 5 windings of 4 turns
T2 balun core #43-2402 or 202 - 3 windings of 4 turns

T4 = Prim 6 Turns; Sec 3 Turns bifilar wind on balun core #61-2402 or #43-2402

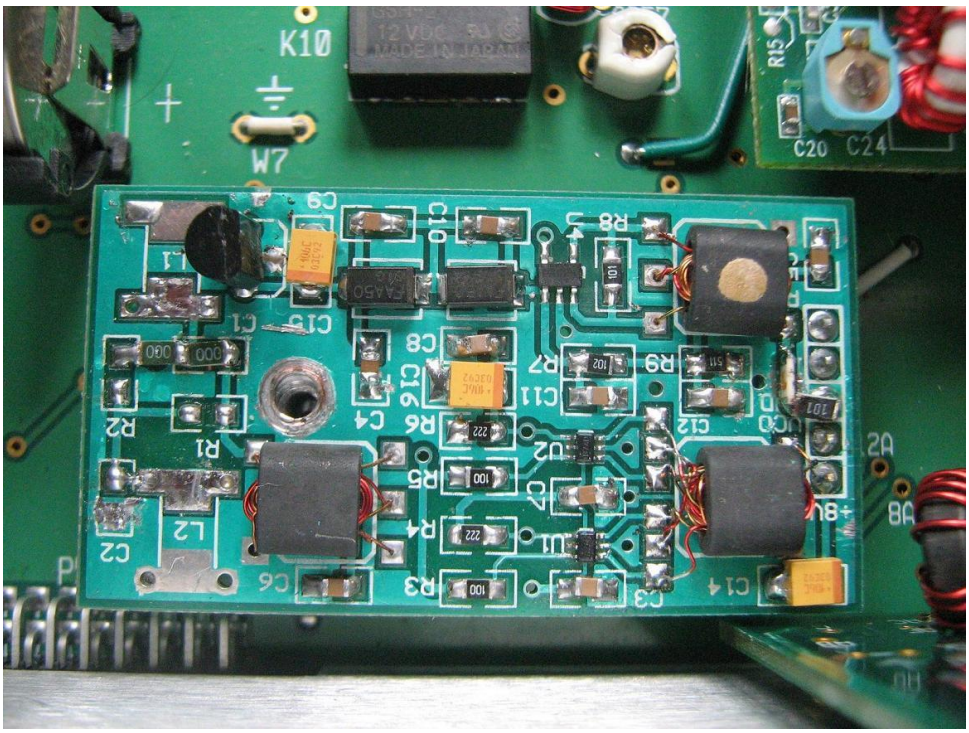

K3 Main RX - 2T H-MODE MIXER - PCB ASSY VIEW

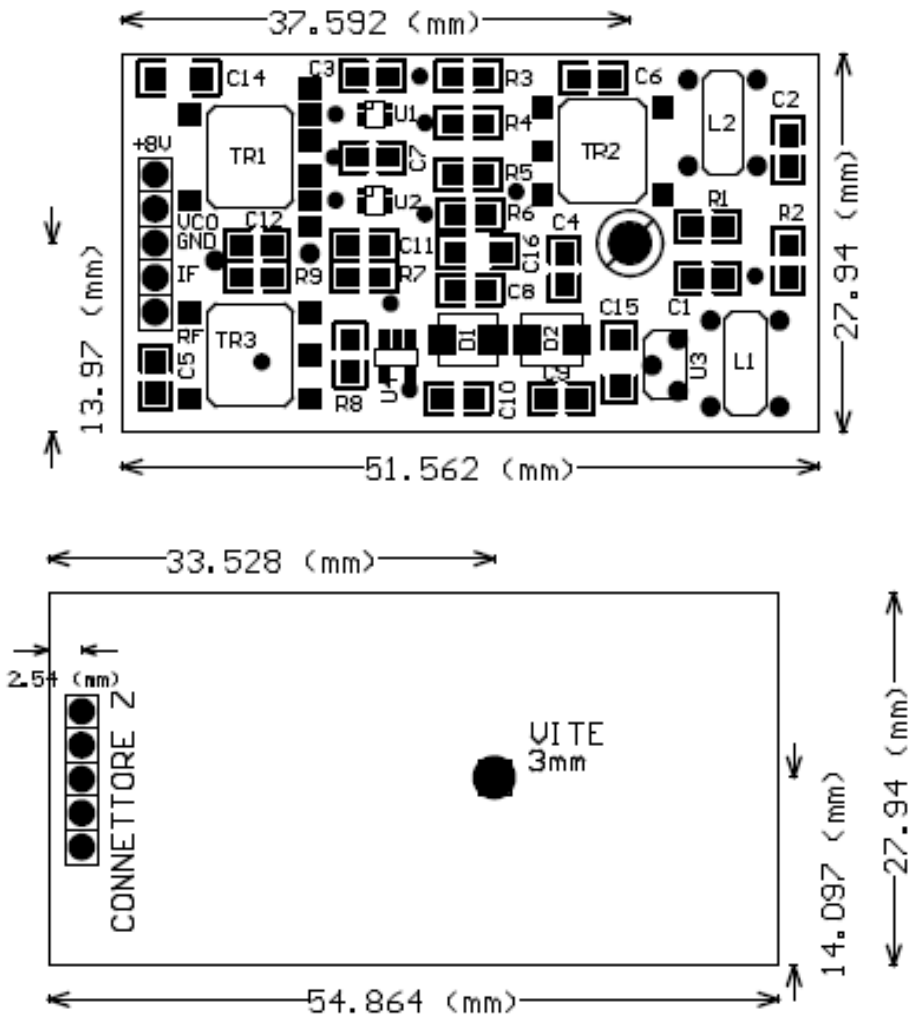

K3 Main RX 2T H-MODE MIXER PCB COMPONENTS POSITIONING AND SIZE

K3 ORIGINAL AND I7SWX 2T H-MODE MIXERS COMPARISON
Test done on Elecraft K3 sn. 01757

TABLE 1

Misure/Measurements RF in 14.220MHz	Original K3 Mixer originale	2T H-Mode Mixer FSA3157	Improvement using 2T H-Mode Mixer
MDS (Sensibilita')	-126dBm	-128dBm *	**+2dBm**
Dynamic Range 2T	98dB	101dB	**+3dB**
3rd Order Intercept IP3	+21.0dBm	+23.5dBm	**+2.5 dBm**

*Audio Noise at output dropped nearly of 6dB (This is not NF value)

2T H-MODE MIXER TWO TONE TEST

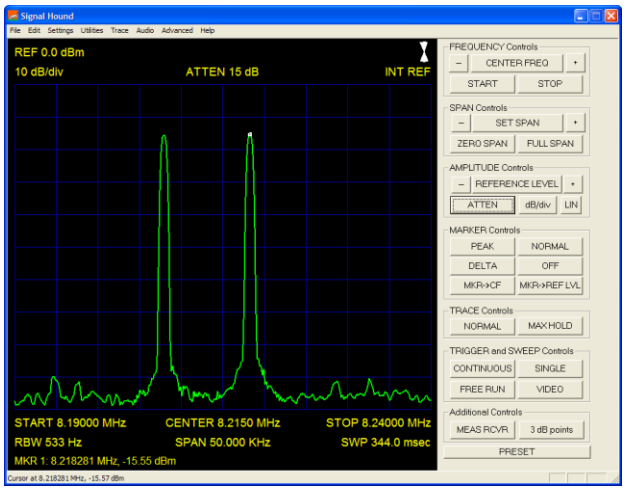

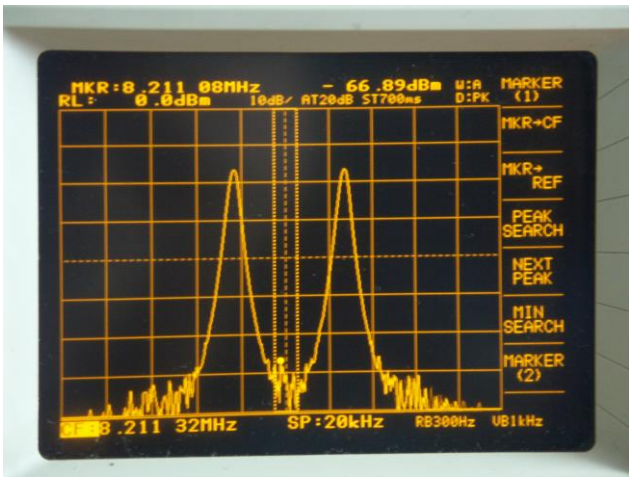

10KHz Tones -11dBm input 10 MHz

5kHz Tone -10dBm input 14MHz

MIXERS OUTPUT SIGNALS VIEW COMPARISON

TABLE 2

Frequency/Frequenza *RF in 14.220MHz*	K3 Mixer original/originale	2T H-Mode Mixer FSA3157	Improvement with 2T H-Mode Mixer
RF in	-40dBm	-40dBm	same
IF out 8.215 MHz	-44.5dBm	-44dBm	+0.5dBm
30MHz noise level line	-80dBm	-83dBm	3dBm better
RF feedthrough/leakage	-72.0dBm	Into the noise level Nel rumore	Lower Spuries
LO feedthrough/leakage 22.415MHz	-49.0dBm	-62.8dBm	Lower of 13.8dBm
RF+LO 36.615MHz	-57.0dBm	-69.0dBm	12dBm
2xLO 44.830MHz feedthrough/leakage	-54.0dBm	-63.6dBm	Lower of 9.6dBm
53.045MHz feedthrough/leakage	-62.0dBm	Into the noise level Nel rumore	Lower Spuries

See following pictures

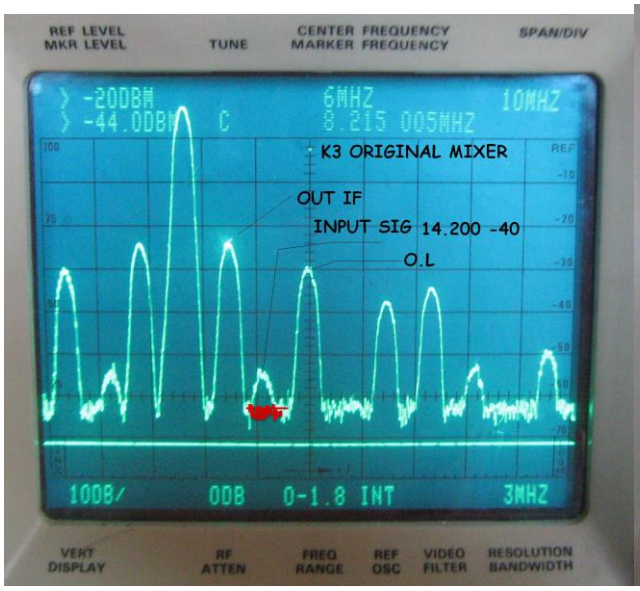

K3 ORIGINAL MIXER

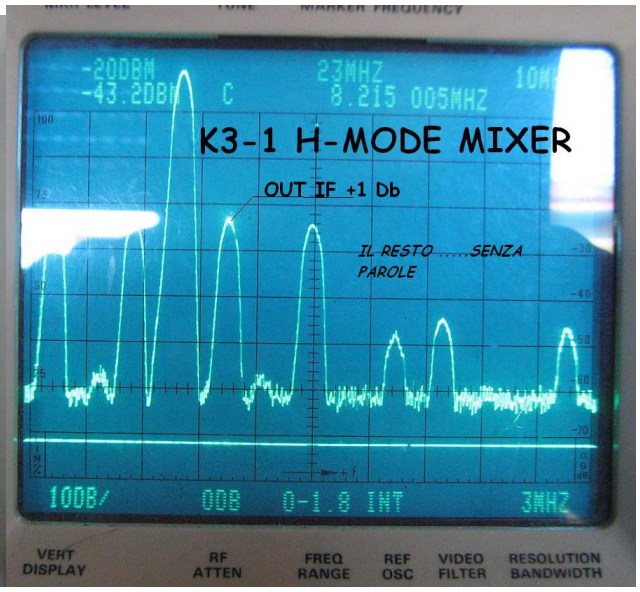

2T H-MODE MIXER

2T H-MODE MIXER OUTPUT SPECTRUM

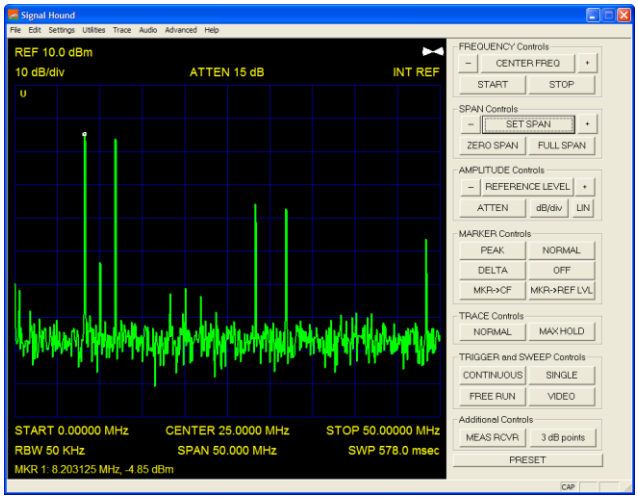

1.8MHz BW 50MHz

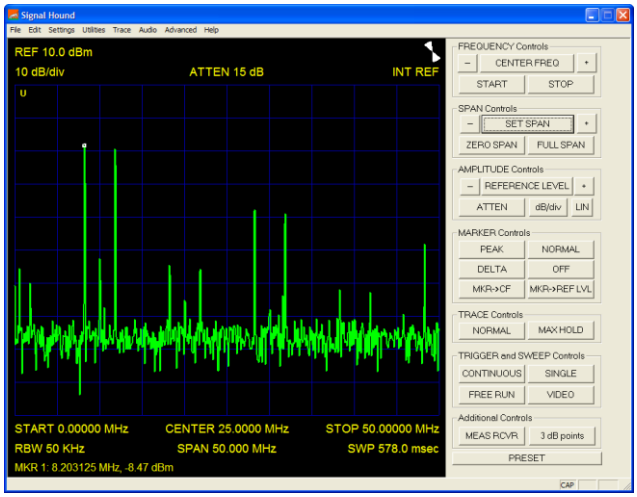

1.8MHz BW 200MHz

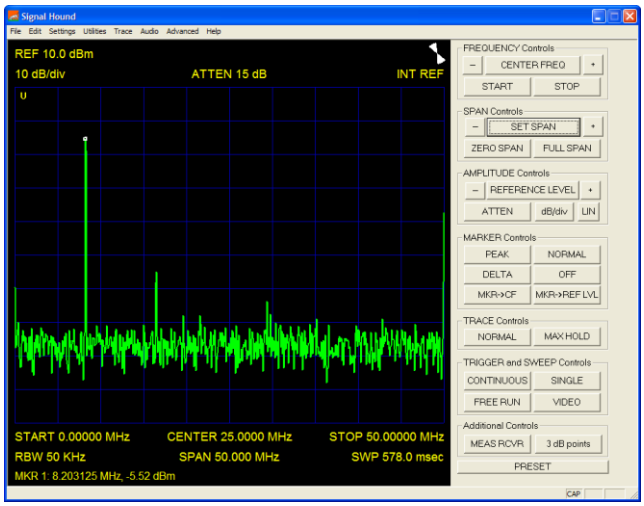

50MHz BW 50MHz

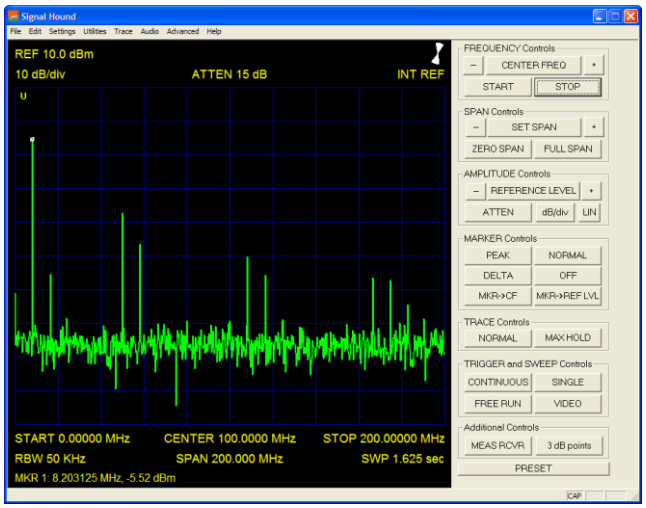

50MHz BW 200MHz

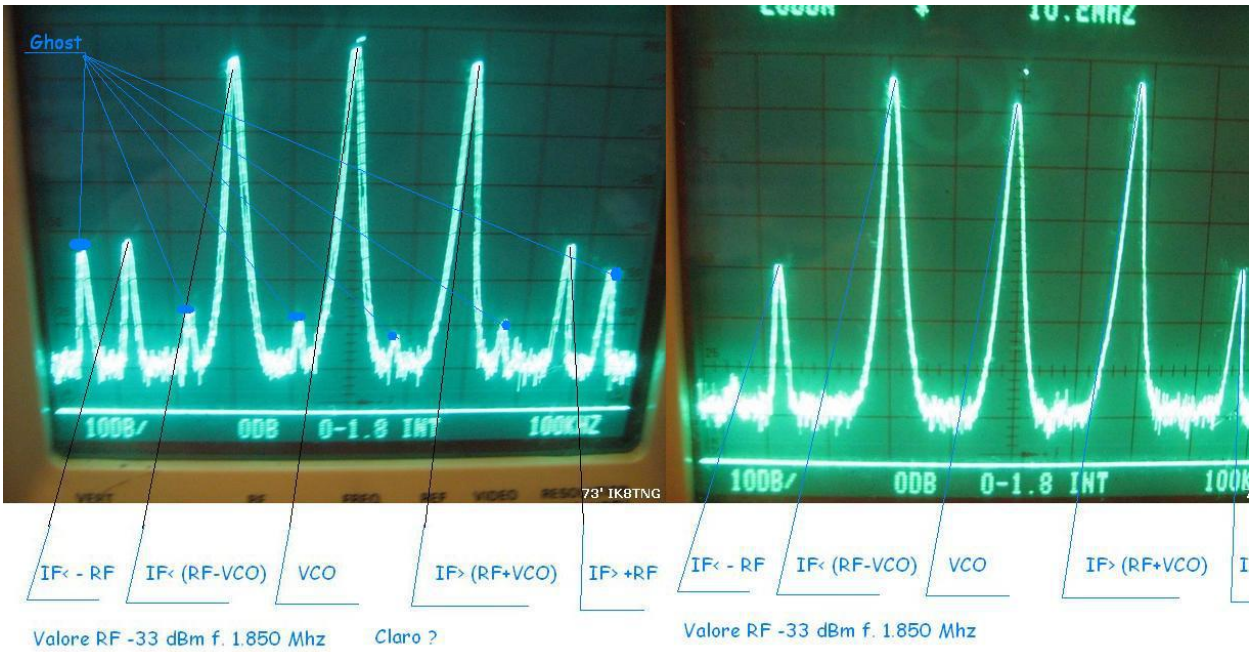

K3 ORIGINAL MIXER **2T H-MODE MIXER**

The pictures can help comparison between the K3 original mixer and the 2T H-Mode Mixer; we can see how the latter one has less spurs and lower base noise than the original.
The measurement was done at 1.8MHz with RF input of -33dBm, as defined by Elecraft for RX Calibration.

ELECRAFT K3 – RECEIVER TEST

Dual Tone Generator I7SWX- with Low Phase Noise Xtal Oscillators at 14MHz
Spacing 5 kHz -10dBm;
Attenuator UHF Marconi 142dBm;
Reference Generator HP fixed at -40dBm;

D.U.T.
Elecraft K3: **preRF** (OFF) **preIF** (OFF) **BW** (2,4kHz) Rx Eq **Flat**

K3 ORIGINAL CONFIGURATION

Audio set 12 clock; PRE-AMP OFF

MDS (Sensitivity)	-126 dBm
IF Filter BW	2.4 kHz

MEASUREMENTS WITH PRE-AMP OFF.

Two Tones Spacing	5 kHz
DR (2 tone Dynamic Range)	98.0 dB
Third Order Intercept (IP3)	21.0 dBm

WITH AMPLIFIER:
filter Gain increased of >3dB and Audio Noise at output Increased > 8.5 dB (?)

K3 with 1st Mixer I7SWX 2T H-Mode Mixer

Audio set 12 clock; PRE-AMP OFF
MDS (Sensitivity) -128 dBm
IF Filter BW 2.4kHz

MEASUREMENTS WITH PRE-AMP OFF.

Two Tones Spacing	5 kHz
DR (2 tone Dynamic Range)	101.0 dB
Third Order Intercept (IP3)	23.5 dBm

Audio Noise at output dropped <6dB (NOT NF, probably due to lower noise of th 2T H-Mode Mixer and MDS.

NOTE:
These numbers have to be taken as relative and not absolute. The increase of MDS is due to lower noise of H-Mode Mixer and lower spuries, giving a benefit in noise.

PHASE DIFFERENCE BETWEEN TWO 2T H-MODE MIXERS OUTPUT

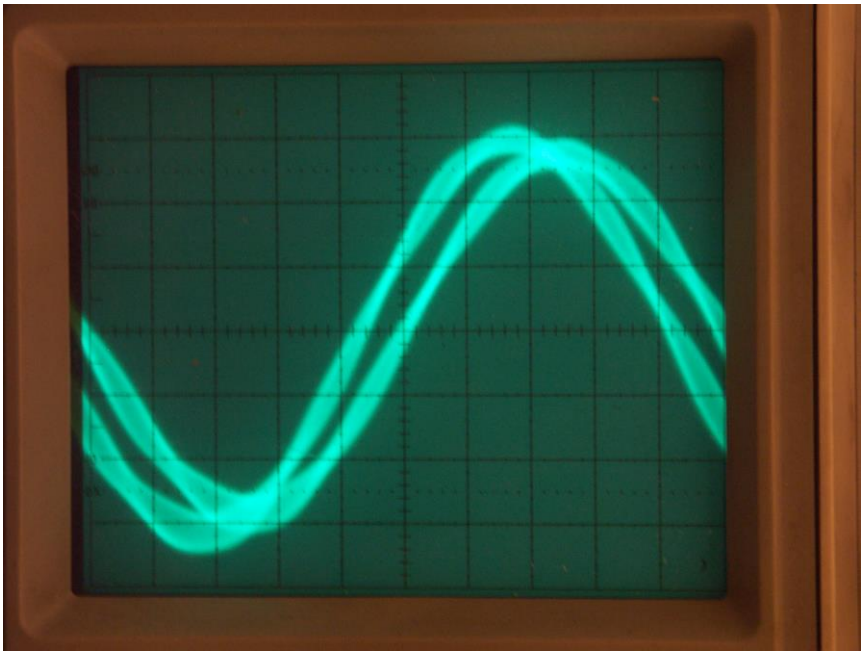

The K3 is probably one of the best equipment for Diversity Receive. For these Users we have done a simple test to measure a phase difference between two 2T H-Mode Mixers output. This is not an easy measure with amateur radio available equipment. The picture reports the measure at the same RF input at 54MHz, same LO generator at 62MHz and IF 8MHz outputs. The phase difference is 4nS, measured on a Tektronix 60MHz dual channel scope. The two mixers were not selected for same conversion loss and IMD.

CALIBRATION

Following the mixer replacement the K3 utility must be run for receiver RF Gain Calibration and TX Gain Calibration. Such calibrations have to be performed as reported by Elecraft in the K3 Utility manual.

RF GAIN CALIBRATION

This wizard is used to calibrate the RF Gain of the main and sub receivers. A 50 microvolt (-73 dBm, S9) signal generator is required for low-level calibration. Any good generator may be used or an Elecraft XG1, XG2 or Elecraft XG3 RF Signal Source.

High level calibration requires a -33 dBm signal generator, such as the Elecraft XG3 RF Signal Source. Select Computed or Default Calibration
If you have an RF signal source available, click "Compute RF Gain calibration data using a signal source".

If you do not have a signal source available you may avoid the RF Gain test or you may wish to use the standard "factory default" RF Gain calibration values.

Transmitter Gain Calibration

The Automatic Transmitter Gain Calibration procedure has to be run as described in the Calibration Procedures section of the K3 Owner's Manual. This test requires a suitable dummy load for the TX power (5W or 50W).

The following lists are the reports following the TX Calibration routine run.

K3 TX CALIBRATION

K3 Tx Gain Calibration data written on 2011-11-09 at 18:03:30

K3 ORIGINAL MIXER	2T H-MODE MIXER unit A	2T H-MODE MIXER unit B
K3 Serial Number 01757	K3 Serial Number 01757	K3 Serial Number 01757
K3 MCU version 04.42	K3 MCU version 04.42	K3 MCU version 04.39
Elecraft K3 Utility Version 1.4.4.25	Elecraft K3 Utility Version 1.4.4.25	Elecraft K3 Utility Version 1.4.4.2
01900 kHz TxGain LP 33	01900 kHz TxGain LP 30	01900 kHz TxGain LP 32
03750 kHz TxGain LP 20	03750 kHz TxGain LP 18	03750 kHz TxGain LP 19
05366 kHz TxGain LP 25	05366 kHz TxGain LP 23	05366 kHz TxGain LP 23
07150 kHz TxGain LP 25	07150 kHz TxGain LP 20	07150 kHz TxGain LP 21
10125 kHz TxGain LP 20	10125 kHz TxGain LP 14	10125 kHz TxGain LP 14
14200 kHz TxGain LP 13	14200 kHz TxGain LP 09	14200 kHz TxGain LP 09
18110 kHz TxGain LP 15	18110 kHz TxGain LP 11	18110 kHz TxGain LP 11
21200 kHz TxGain LP 11	21200 kHz TxGain LP 08	21200 kHz TxGain LP 08
24930 kHz TxGain LP 24	24930 kHz TxGain LP 19	24930 kHz TxGain LP 18
29000 kHz TxGain LP 30	29000 kHz TxGain LP 24	29000 kHz TxGain LP 24
52000 kHz TxGain LP 21	52000 kHz TxGain LP 14	52000 kHz TxGain LP 14
01900 kHz TxGain HP 28	01900 kHz TxGain HP 27	01900 kHz TxGain HP 27
03750 kHz TxGain HP 58	03750 kHz TxGain HP 52	03750 kHz TxGain HP 54
05366 kHz TxGain HP 48	05366 kHz TxGain HP 44	05366 kHz TxGain HP 44
07150 kHz TxGain HP 54	07150 kHz TxGain HP 44	07150 kHz TxGain HP 44
10125 kHz TxGain HP 33	10125 kHz TxGain HP 24	10125 kHz TxGain HP 24
14200 kHz TxGain HP 15	14200 kHz TxGain HP 11	14200 kHz TxGain HP 11
18110 kHz TxGain HP 11	18110 kHz TxGain HP 08	18110 kHz TxGain HP 08
21200 kHz TxGain HP 09	21200 kHz TxGain HP 07	21200 kHz TxGain HP 07
24930 kHz TxGain HP 11	24930 kHz TxGain HP 09	24930 kHz TxGain HP 09
29000 kHz TxGain HP 21	29000 kHz TxGain HP 18	29000 kHz TxGain HP 18
52000 kHz TxGain HP 16	52000 kHz TxGain HP 11	52000 kHz TxGain HP 11

TERMINATION DIPLEXER FOR MAIN RECEIVER 1ST MIXER (RX).

This modification is suggested to better terminate the 1st mixer in the RX function. The first mixer is bilaterally used in RX and TX functions, the termination cannot be installed on the H-Mode mixer PCB as the RX IF becomes TX RF output and the RX RF input becomes the TX IF input (frequencies reversed).

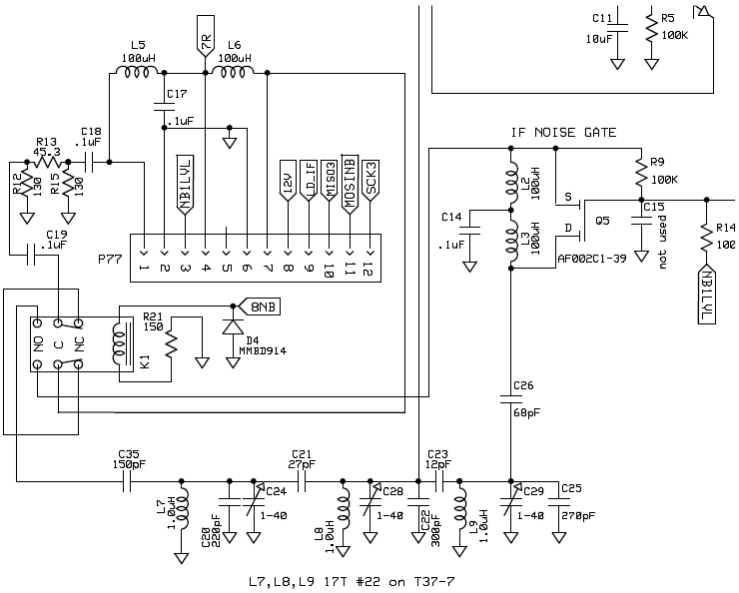

K3 NOISE BLANKER CIRCUIT DIAGRAM.

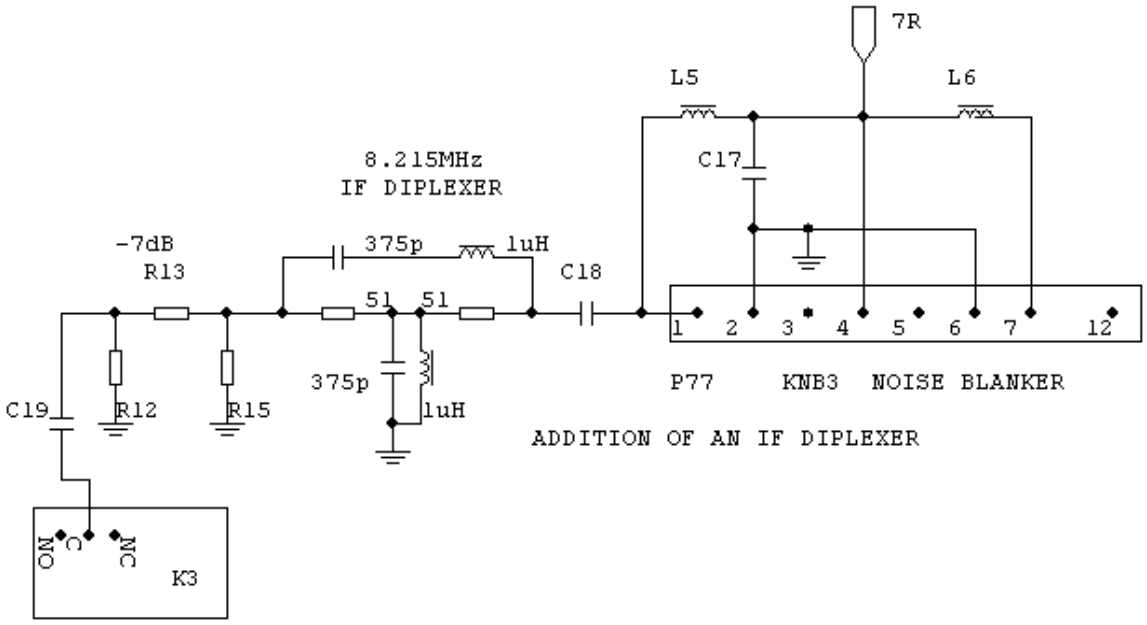

The suggested IF Diplexer has to be inserted between attenuator R13/R15 resistors and capacitor C18. The attenuator value is around -7dB, with the diplexer terminating the RX mixer it may be possible to reduce such value and increase IF gain and reduce some stage noise. A kit is available.

The mod needs to alter C18 position (remove) being relocated on the Diplexer PCB.

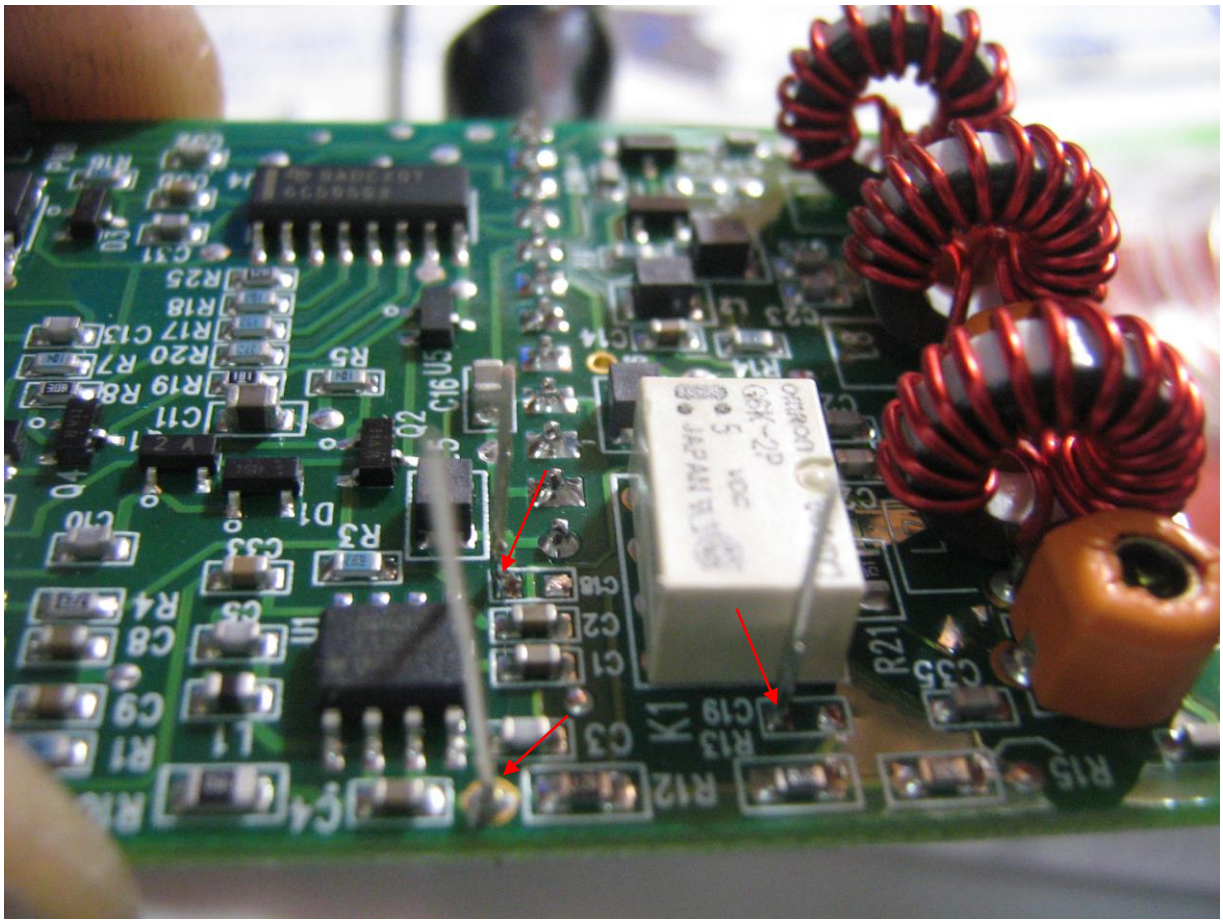

K3 _ KNB3 Noise Blanker board. Red arrows show connecting wires to Main RX 1st IF diplexer-attenuator pcb

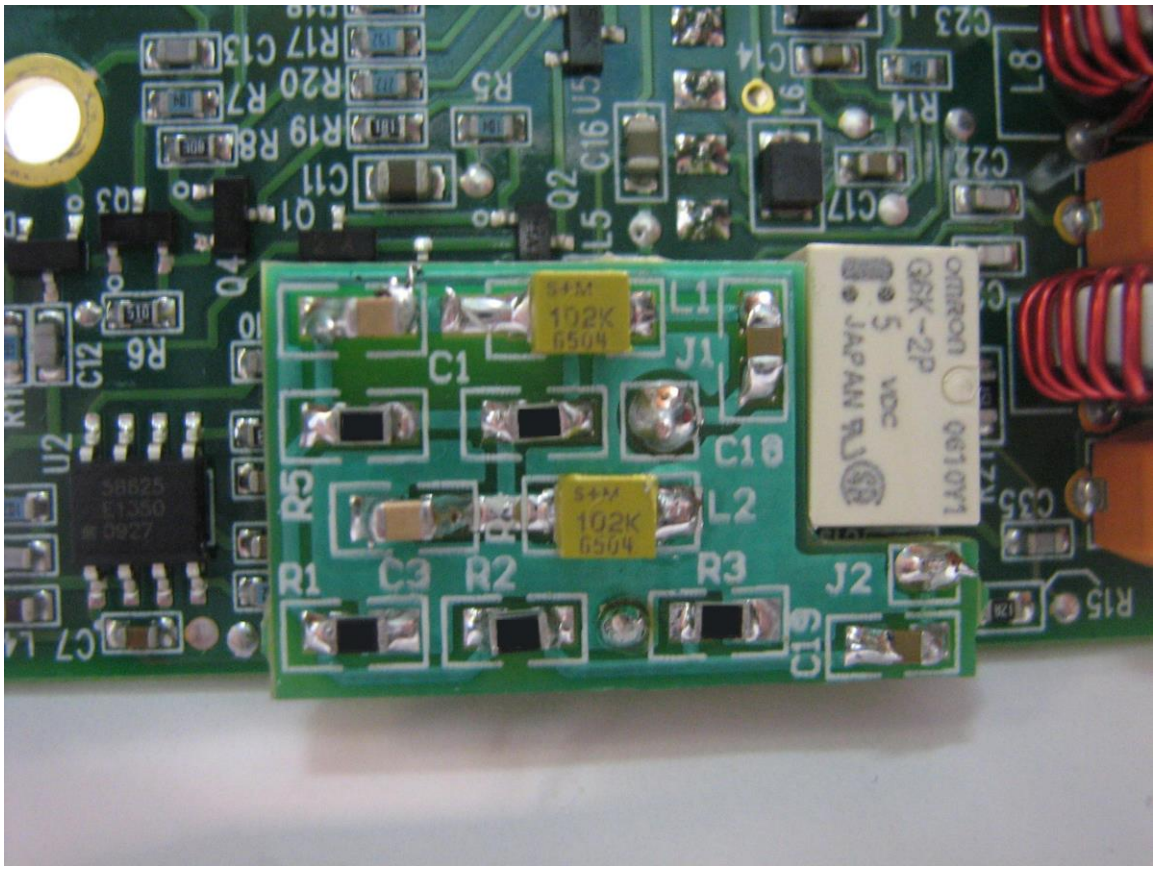

K3 – Main RX 1st IF Diplexer-attenuator PCB installed over KNB3 Noise Blanker board

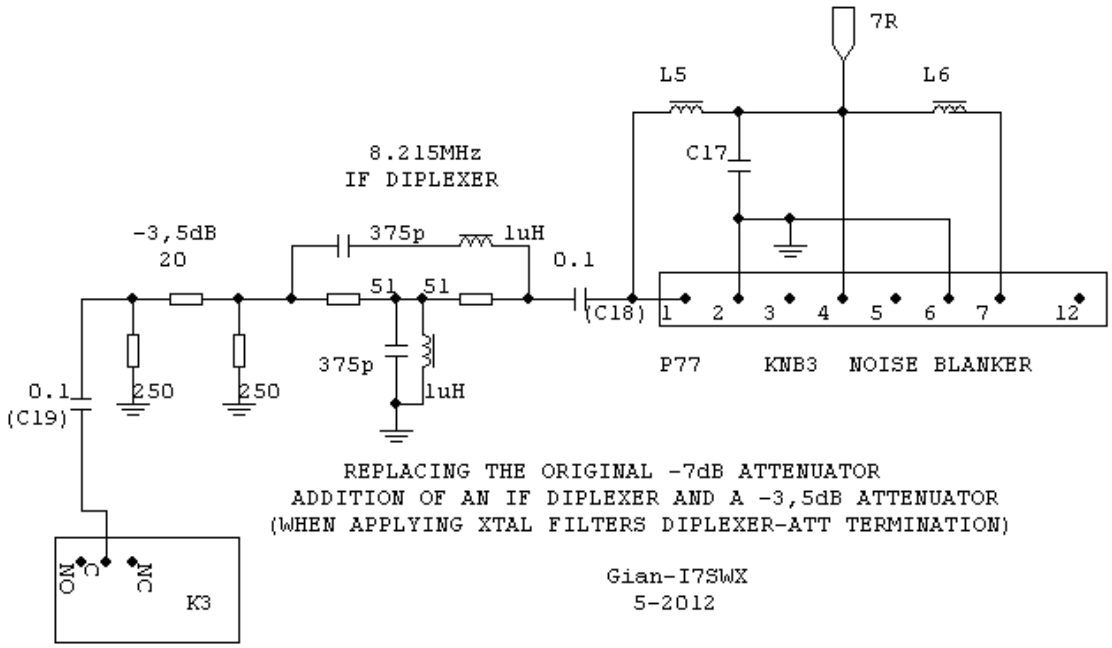

Circuit diagram of Main RX 1st Mixer IF Diplexer insertion

Main RX 1st Mixer IF Diplexer PCB Assy. It contains a -7dB attenuator, like the original one, and a diplexer. The 1st IF diplexer is added to terminate the post-amplifier Q8-Q9 as to reduce load changes to the 1st mixer. Due to another possible modification, associated to the xtal filters termination, the 1st IF diplexer has the attenuator reduced to -3.5dB.

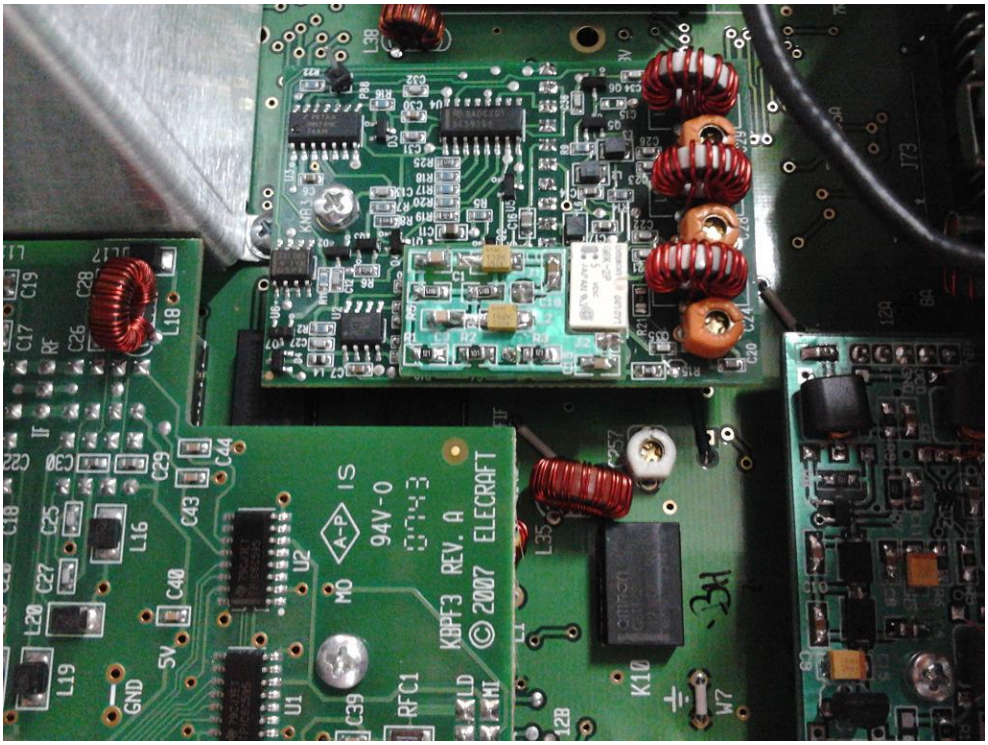

K3 Main RX. On center top is visible the diplexer-attenuator pcb, while on the bottom right is the specific H-Mode Mixer

TERMINATING THE XTAL FILTERS BANK.

The IF xtal filters are followed by the IF amplifier Q1 controlled by HAGC. This type of control presents a changing amplifier input impedance as a variable load to the filters increasing intermodulation of these. To better the filters output load a diplexer-attenuator is inserted between C46 and D21-D22-R29. The diplexer is associated to a -3.5dB attenuator to improve termination. Adding this option requires that the 1st IF diplexer attenuator is changed from -7dB to -3.5dB.

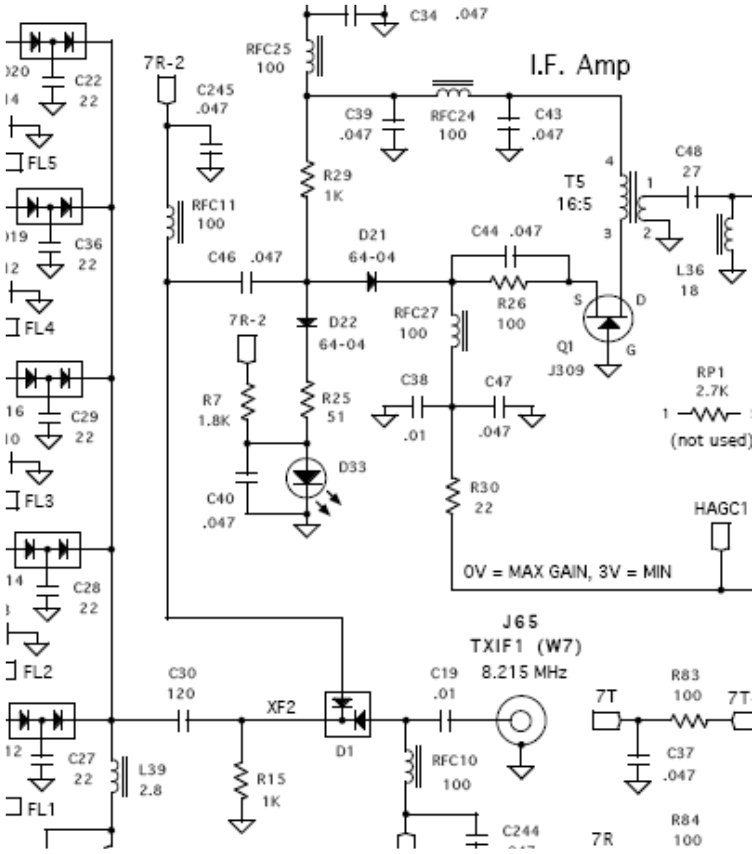

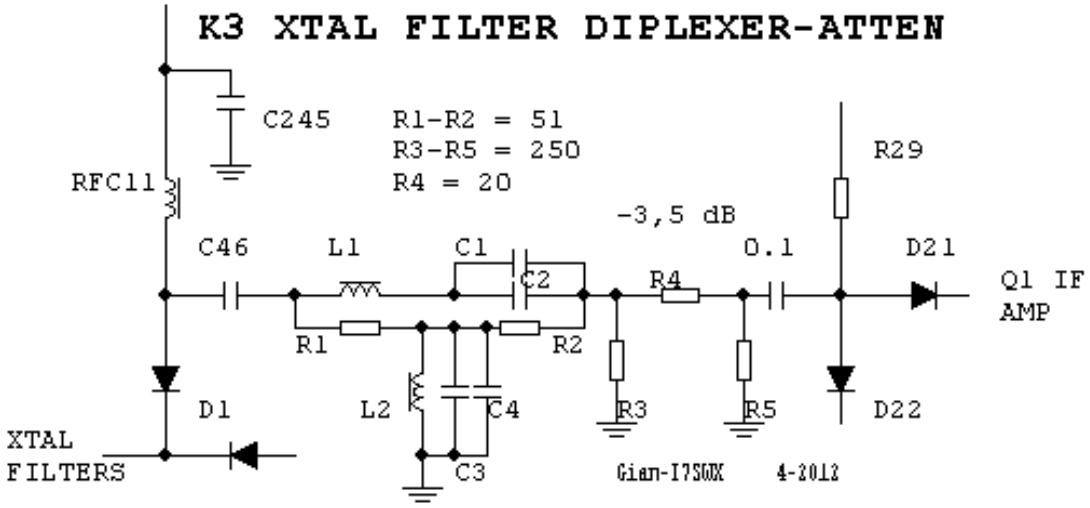

Diplexer-Attenuator Circuit diagram and insertion. Remove C46 and connect Diplexer between spot ex C46 and D21-D22-R29 junction, plus ground

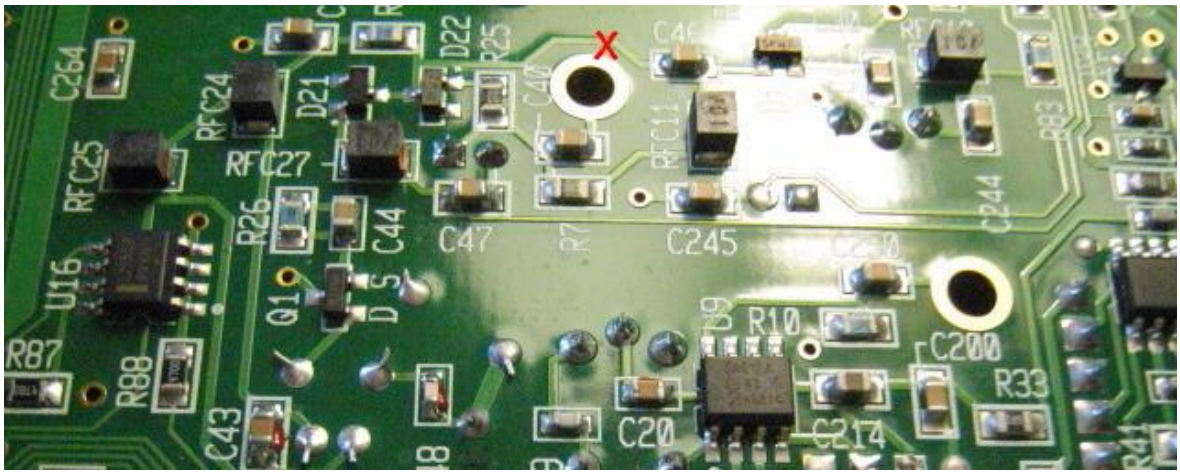

K3 RF Board – Red X shows where cut has to be applied and diplexer-attenuator inserted.

A similar modification may be applied to the Sub RX also.

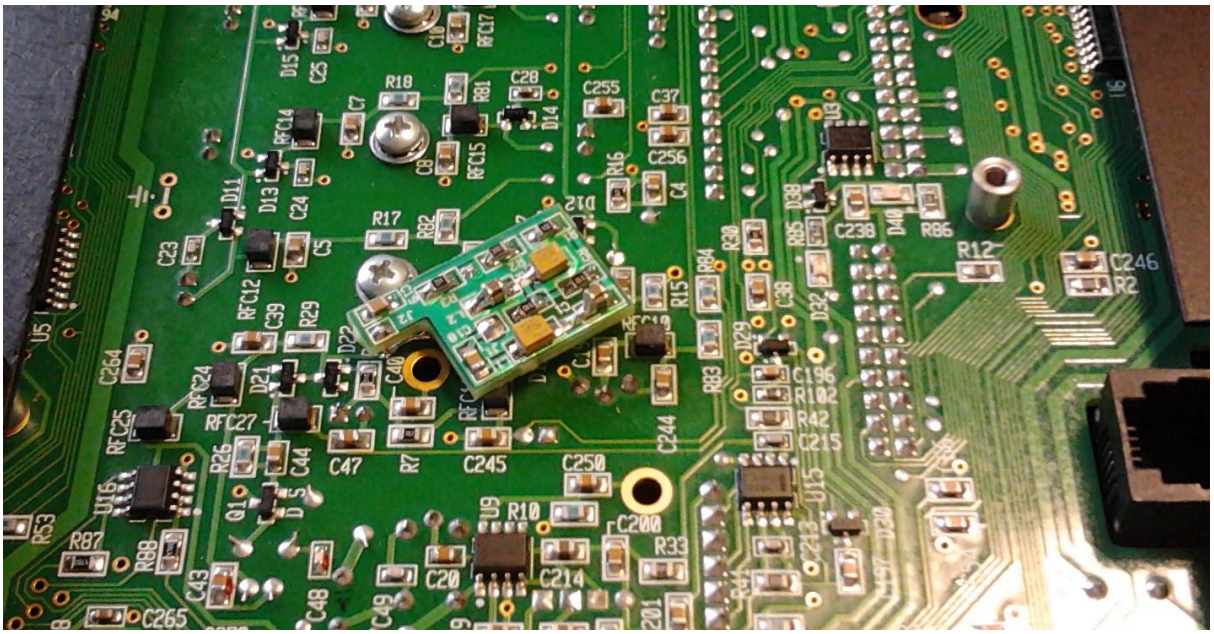

Xtal bank – IF diplexer insertion

SUB RECEIVER 1ST MIXER MOD.

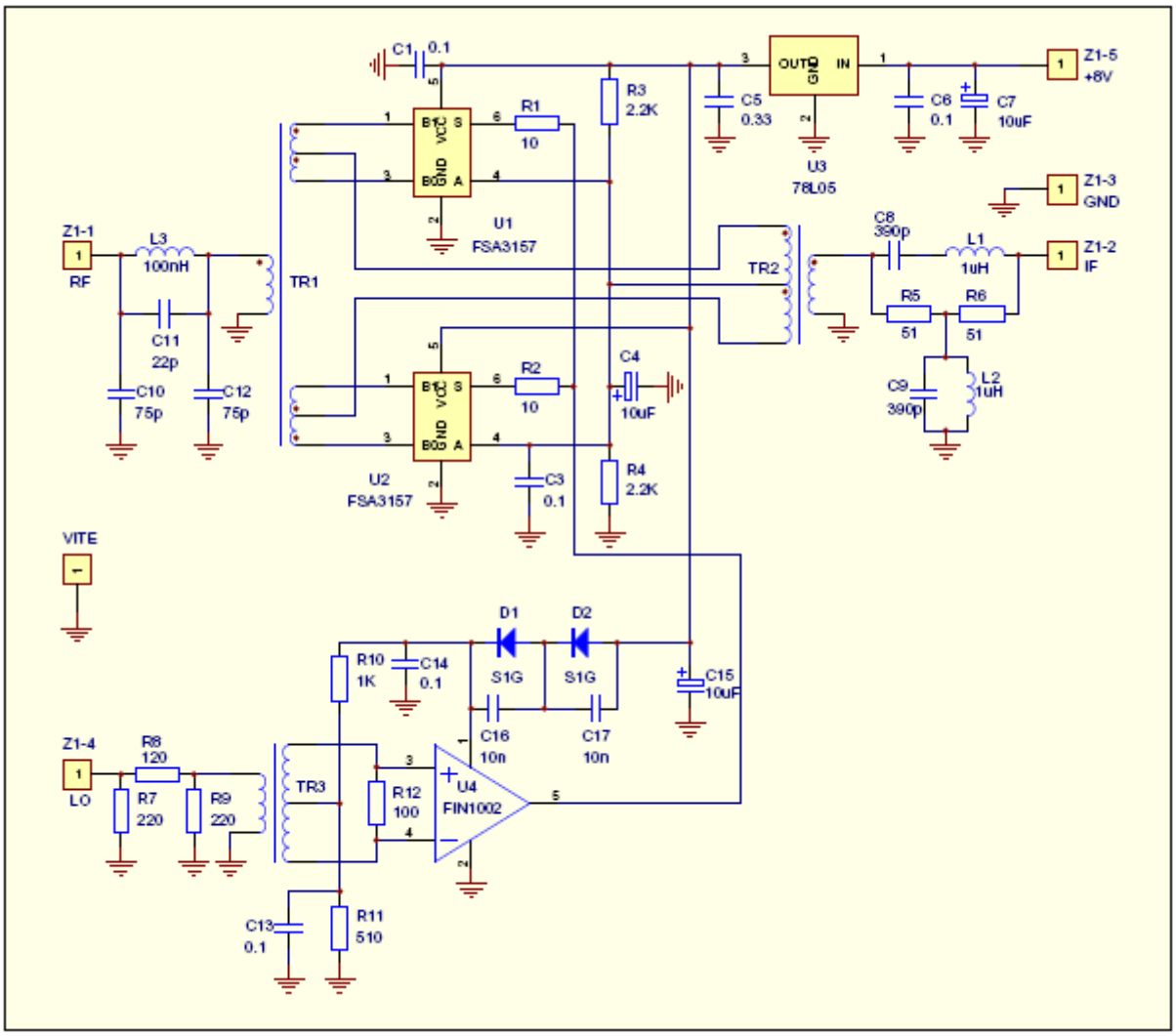

Sub RX 2T H-Mode Mixer Circuit Diagram. This 2T H-Mode Mixer has the same mixer circuit diagram as the one for the Main RX but integrating the terminating diplexer and, at the input, a 60MHz simple low pass filter.

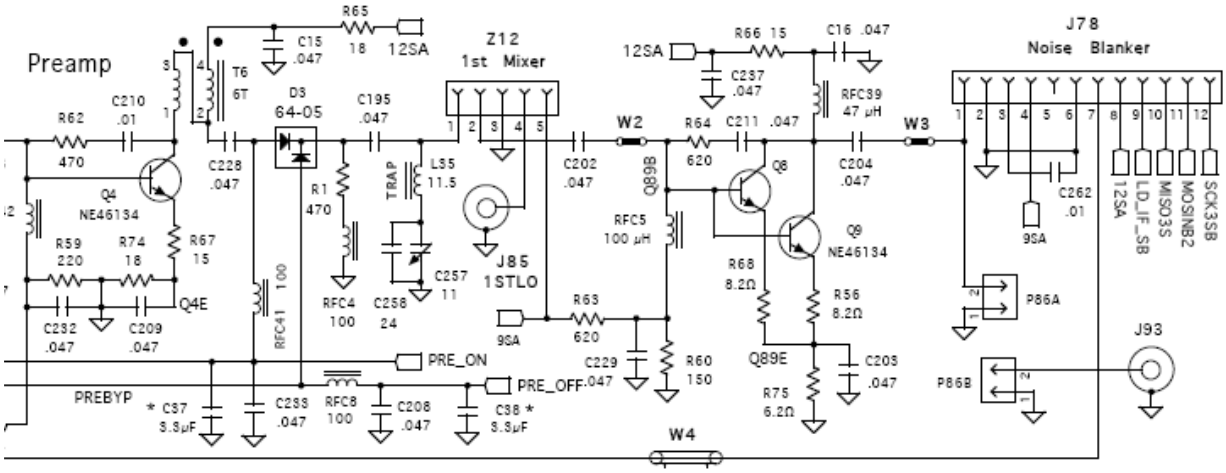

K3 SUB-RECEIVER FRONT END CIRCUIT DIAGRAM

The circuit diagram of SUB RX does not present the RX-TX switching diodes as there is no TX functionality in the sub-receiver.

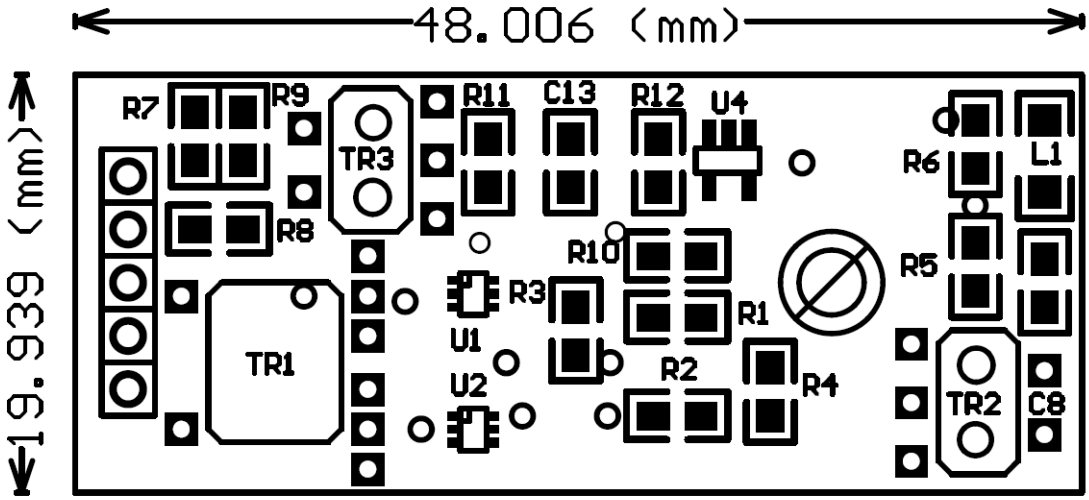

K3 SUB-RECEIVER F.E. 2T H-MODE MIXER PCB

This is the sub-receiver 2t H-Mode Mixer PCB shape. The K3 used for the 1st mixer replacement trials had no sub-receiver KRX3 option. Looking at the manual pictures we could not feel much the space difference available and the size of 2T H-Mode Mixer PCB, the actual H-M M PCB does not permit to reposition the screen cover if inserted. A new specific PCB has been redesigned and produced. Components are assembled on both PCB surfaces.

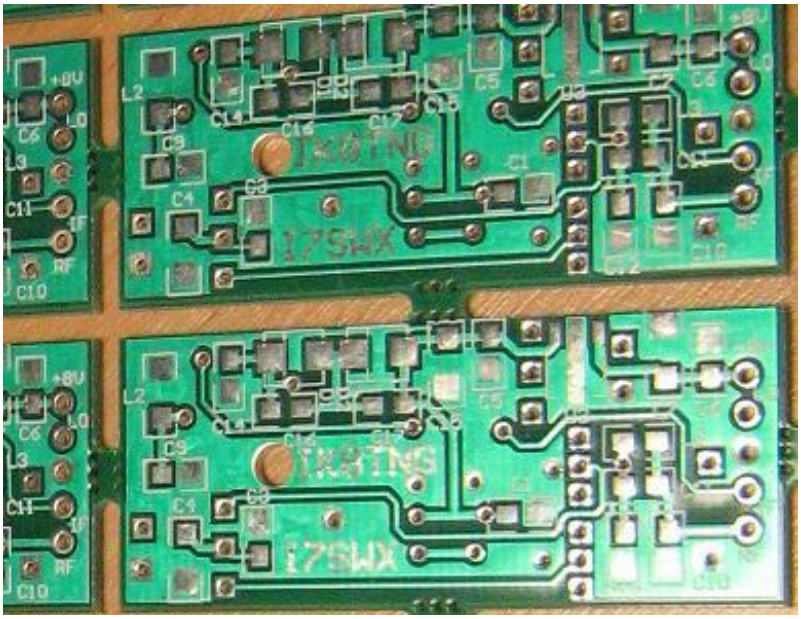

Specific K3 sub receiver H-Mode Mixer PCB

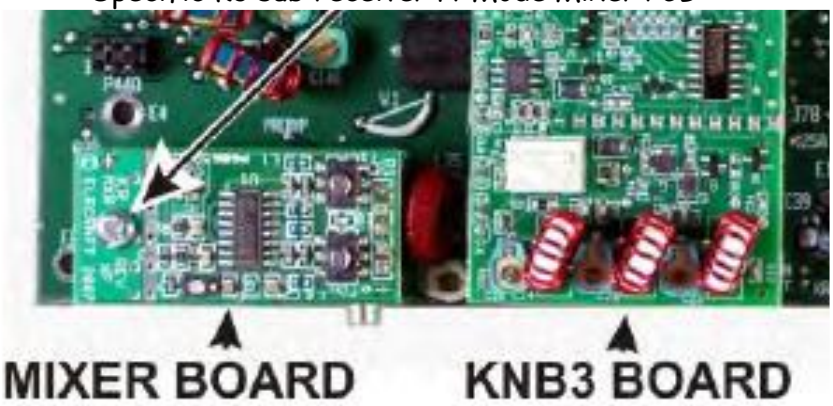

Sub RX H-Mode Mixer – Top and Bottom Views

VIEW OF K3 SUB-RECEIVER 1ST MIXER PCB POSITION

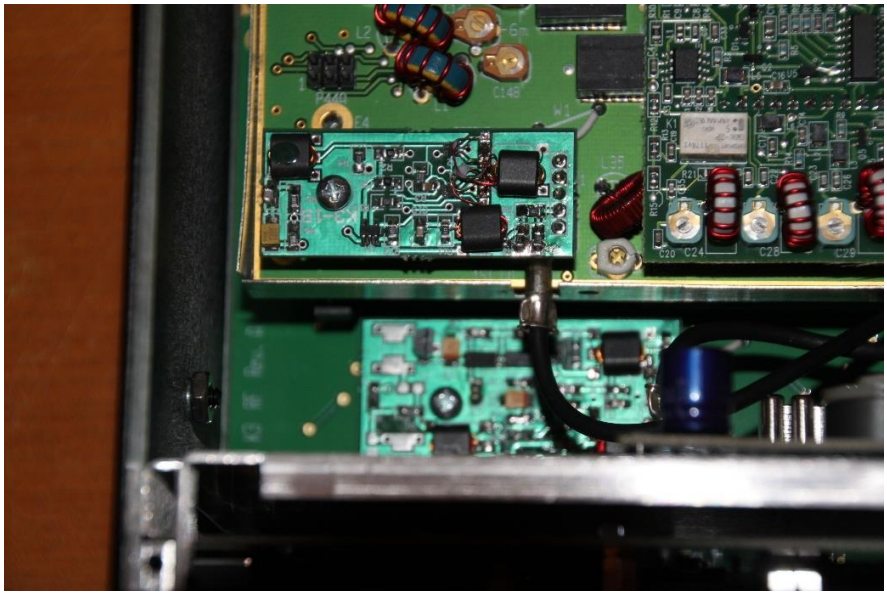

The 2T H-Mode Mixer replacing the 1st original mixer in the K3 SUB RX
In the bottom is visible the 2T H-Mode Mixer in the Main RX

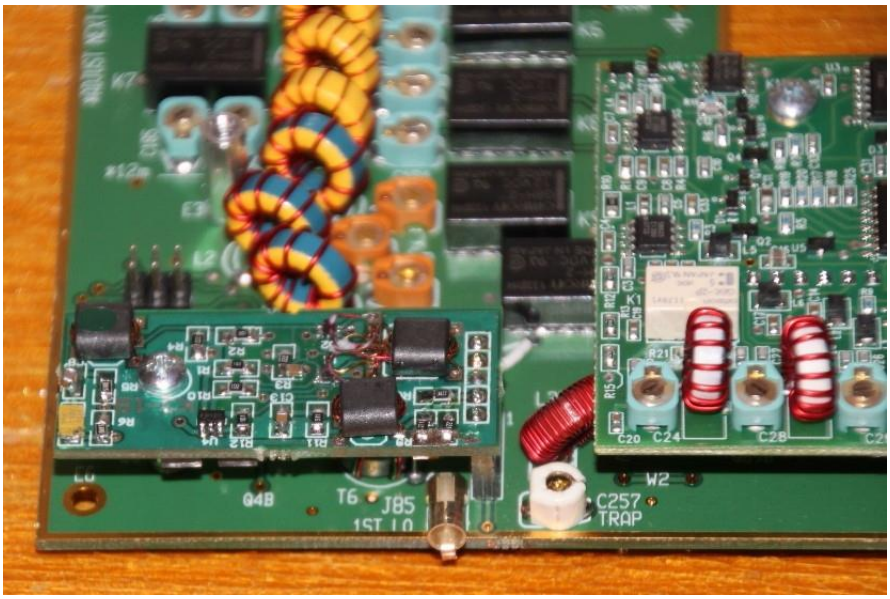

K3 SUB RX - 2T H-Mode Mixer installed in place of original mixer

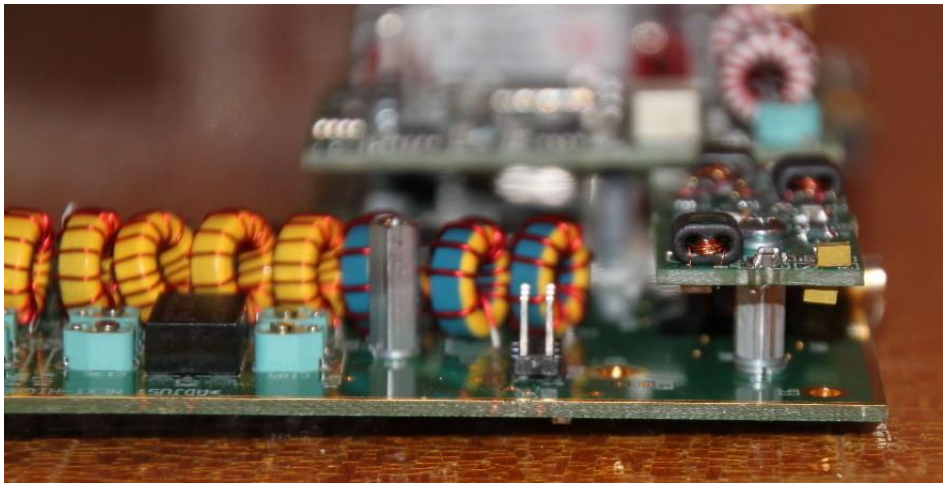

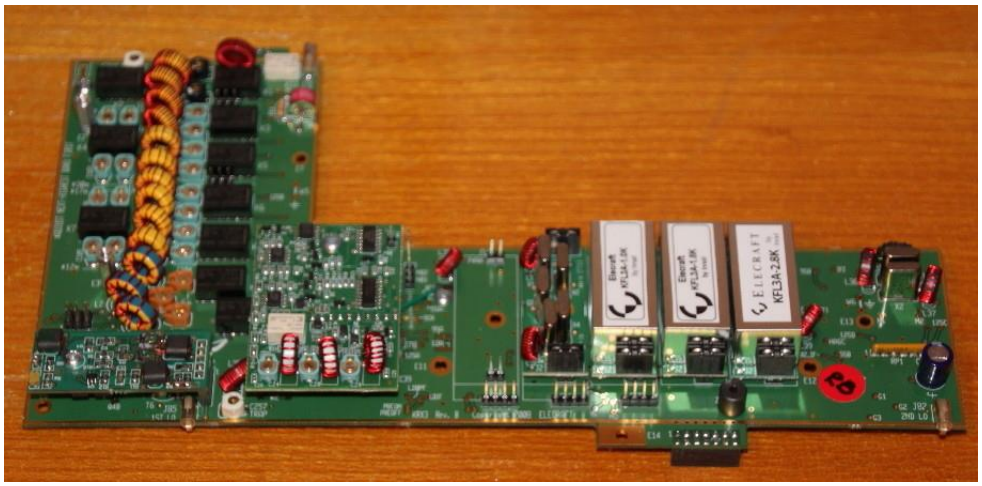

RF GAIN CALIBRATION

Following the Sub RX mixer replacement, the K3 utility must be run for receiver RF Gain Calibration like for the Main RX. Such calibration have to be performed as reported by Elecraft in the K3 Utility manual.

PSU VOLTAGE REGULATOR NOISE

System designers often find themselves battling power supply hum, noise, transients, and various perturbations wreaking havoc with low noise amplifiers, oscillators, and other sensitive devices. Many voltage regulators have excessive levels of output noise including voltage spikes from switching circuits and high flicker noise levels from unfiltered references. Ordinary three-terminal regulators will have several hundred nanovolts per root-hertz of white noise and some reference devices exceed one microvolt per root-hertz. DC to DC converters and switching regulators may have switching products ranging into the millivolt range covering a wide frequency spectrum. And many systems have offending devices that "dirty up" otherwise clean supply rails.

The VCO PSU Voltage Filter reduces AM modulation and phase noise over the power line bus to VCOs and eventual bias circuits, reducing reciprocal mixing

The PSU voltage regulator noise is from the Wenzel Associated Project "Finesse Voltage Regulator Noise!".

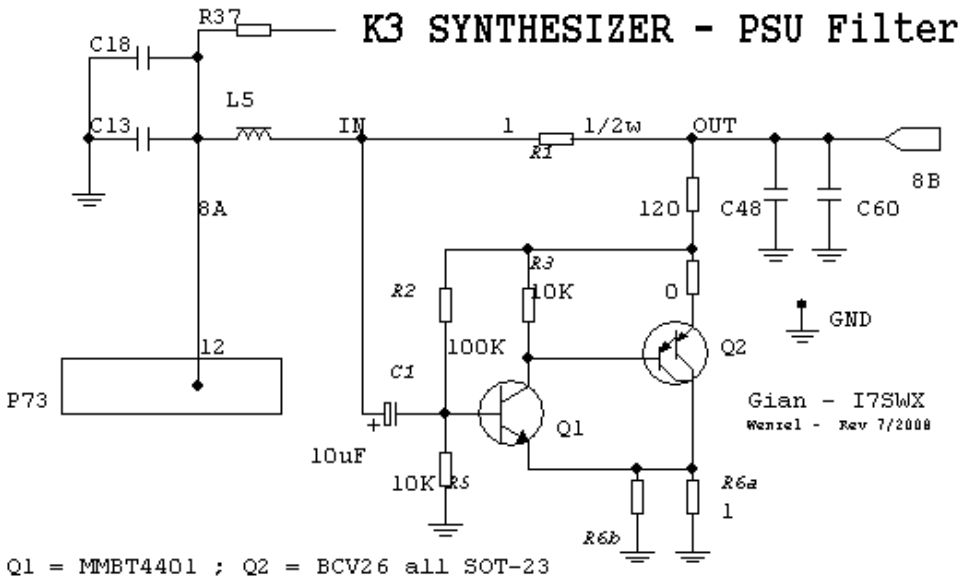

Circuit diagram showing the VCO PSU filter inserted on the K3 Synthesizer board. The circuit is the same one for both K3 synthesizers.

The circuit is inserted between L5 and bus 8B. Remove L5 and solder it again vertically on the bus 8A side- Connect input IN of filter, side of 10uF capacitor, to L5 top; the 8B-C48/C60 junction has to be connected to the OUT point. GND connection has to linked to C18 ground side, see picture

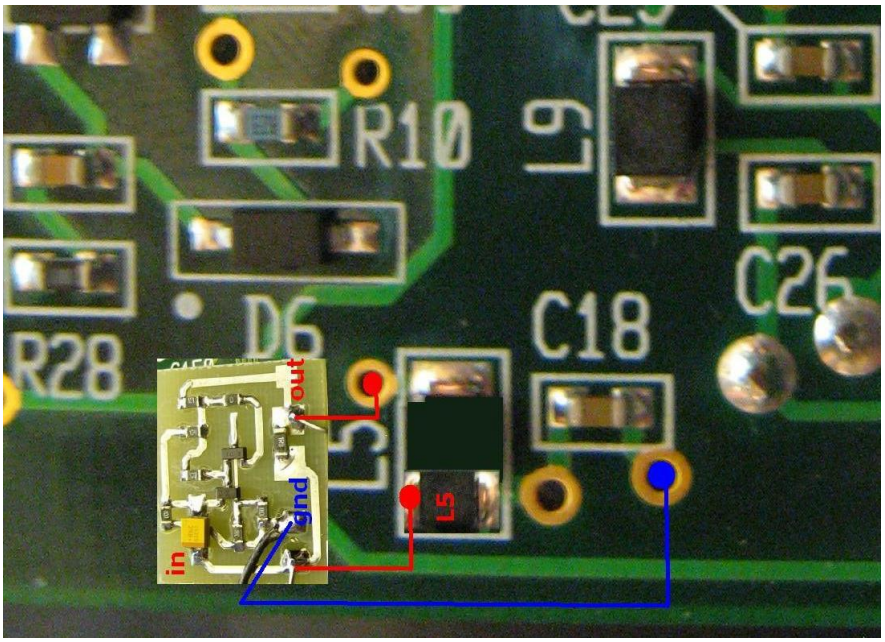

VCO PSU Filter PCB as connected on the K3 PCB Syntesizer (main and sub rx)

MAIN RECEIVER MODS:

Main RX 2T H-Mode Mixer
1st IF diplexer-attenuator
Xtal Filters bank diplexer-attenuator
VCO PSU Filter

SUB RECEIVER MODS:

Sub RX 2T H-Mode Mixer
1st IF diplexer-attenuator *
Xtal Filters bank diplexer-attenuator
VCO PSU Filter

* This is associated to the Xtal Filters termination modification

i7swx@yahoo.com